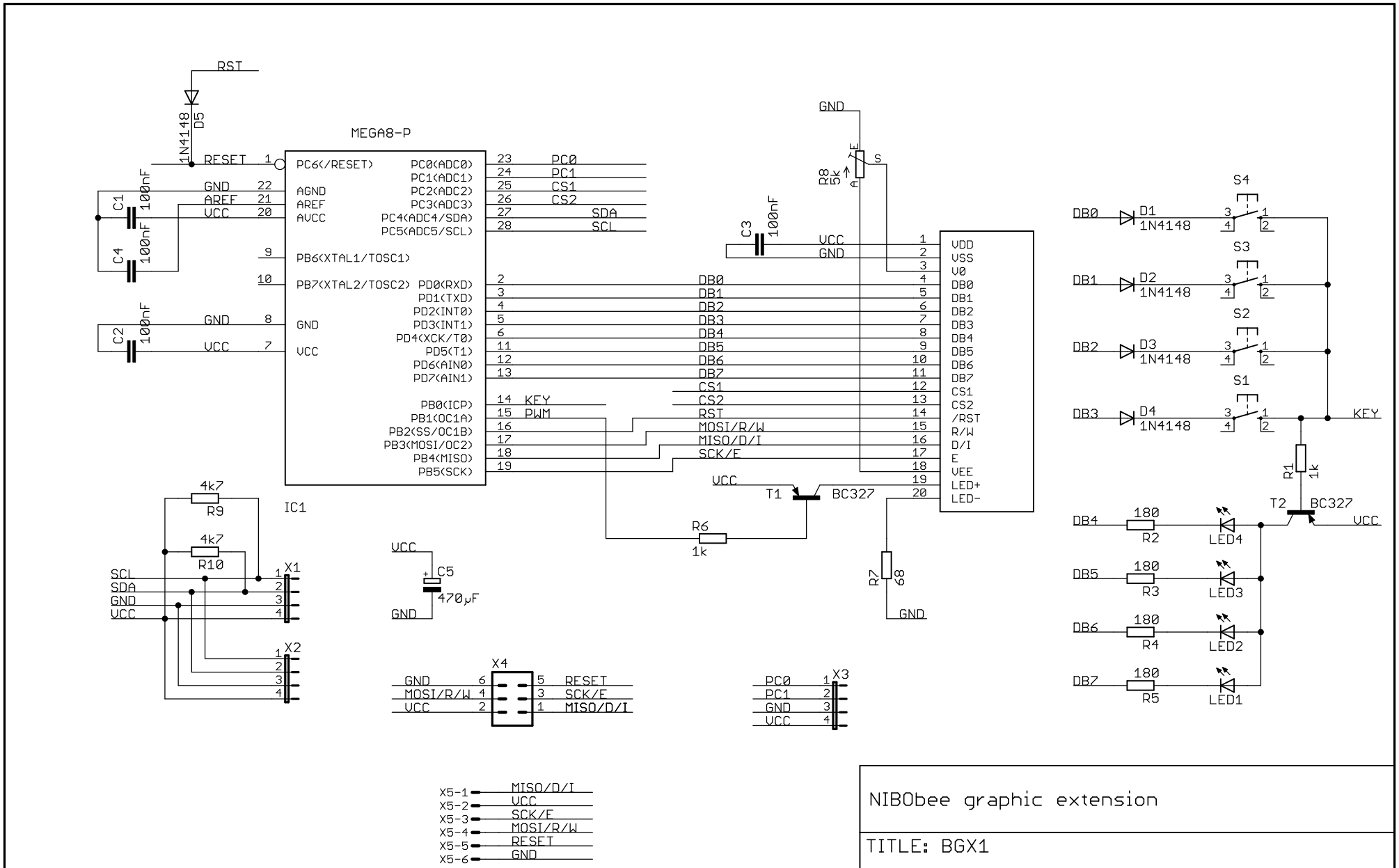


NIBObee graphic extension

TITLE: BGX1

http://nibo.nicai-systems.com

REV: 1.05

Date: 06.08.10 17:33

Sheet: 1/1