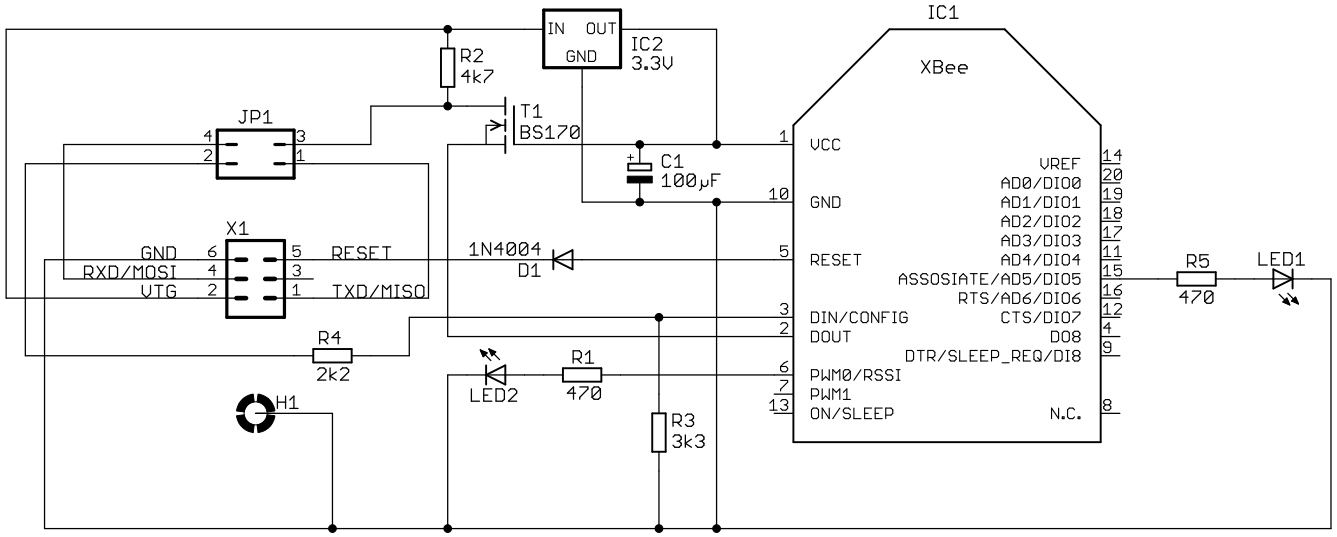

TITLE: NXB2 - Nibo XBee 2

http://nibo.nicai-systems.com

REV: 1.02

Date: 14.11.10 12:46

Sheet: 1/1